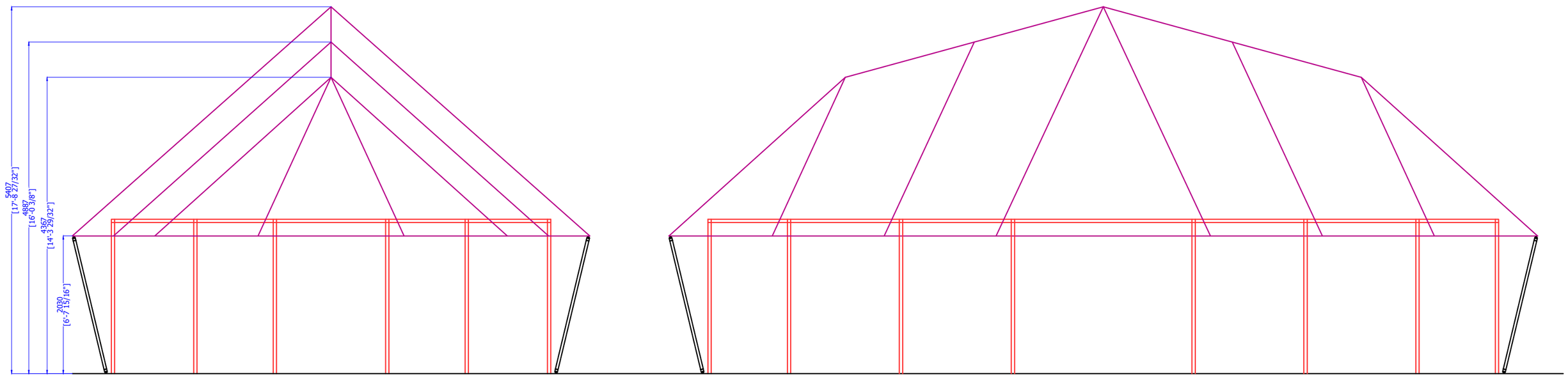
5407
[17'-8 27/32"]
4887
[16'-0 3/8"]
4367
[14'-3 29/32"]
2030
[6'-7 15/16"]

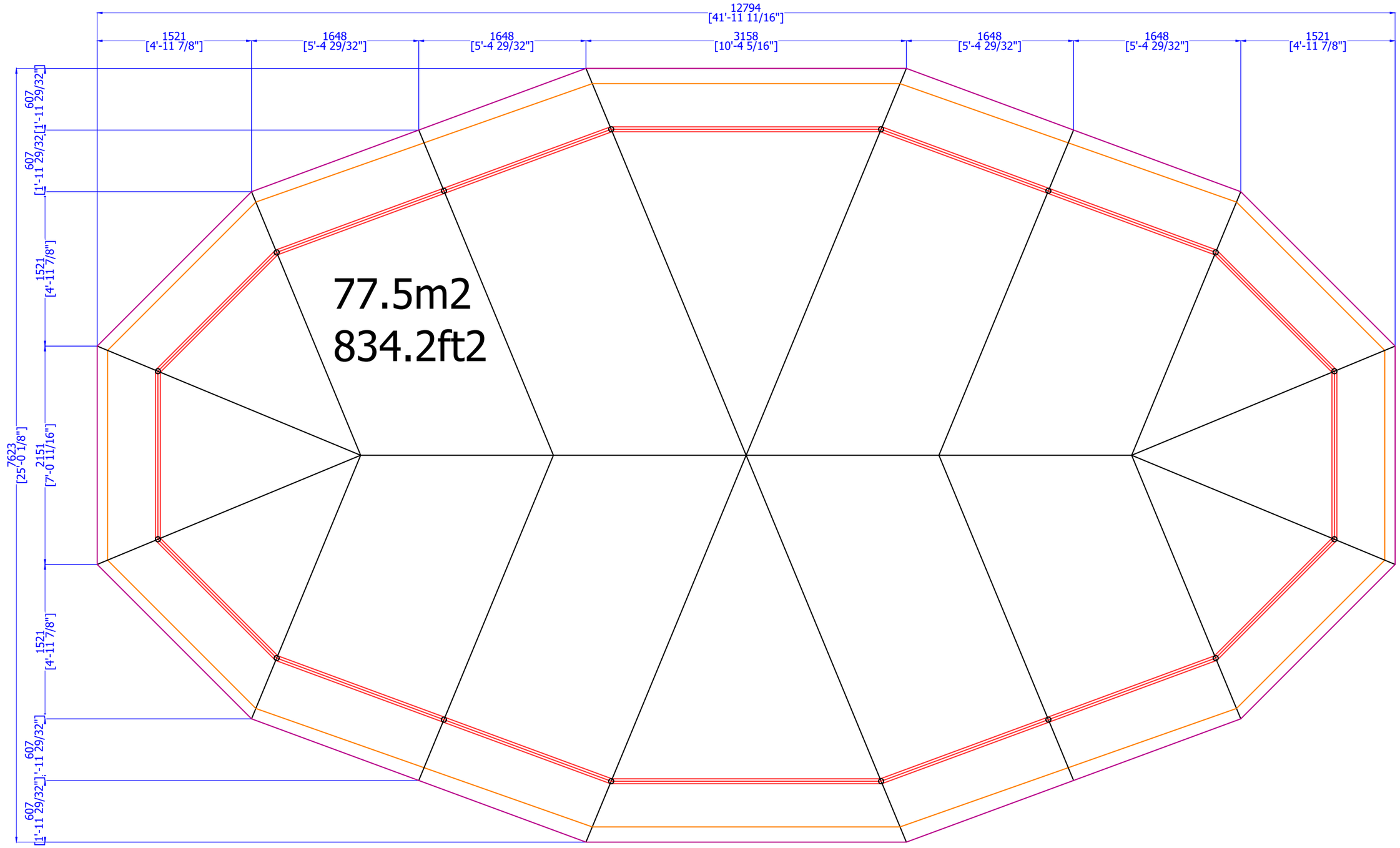
12794
[41'-11 11/16"]
1521
[4'-11 7/8"]
1648
[5'-4 29/32"]
1648
[5'-4 29/32"]
3158
[10'-4 5/16"]
1648
[5'-4 29/32"]
1648
[5'-4 29/32"]
1521
[4'-11 7/8"]
607
[1'-11 29/32"]
607
[1'-11 29/32"]
1521
[4'-11 7/8"]
7623
[25'-0 1/8"]
2151
[7'-0 11/16"]
1521
[4'-11 7/8"]
607
[1'-11 29/32"]
607
[1'-11 29/32"]
77.5m2
834.2ft2

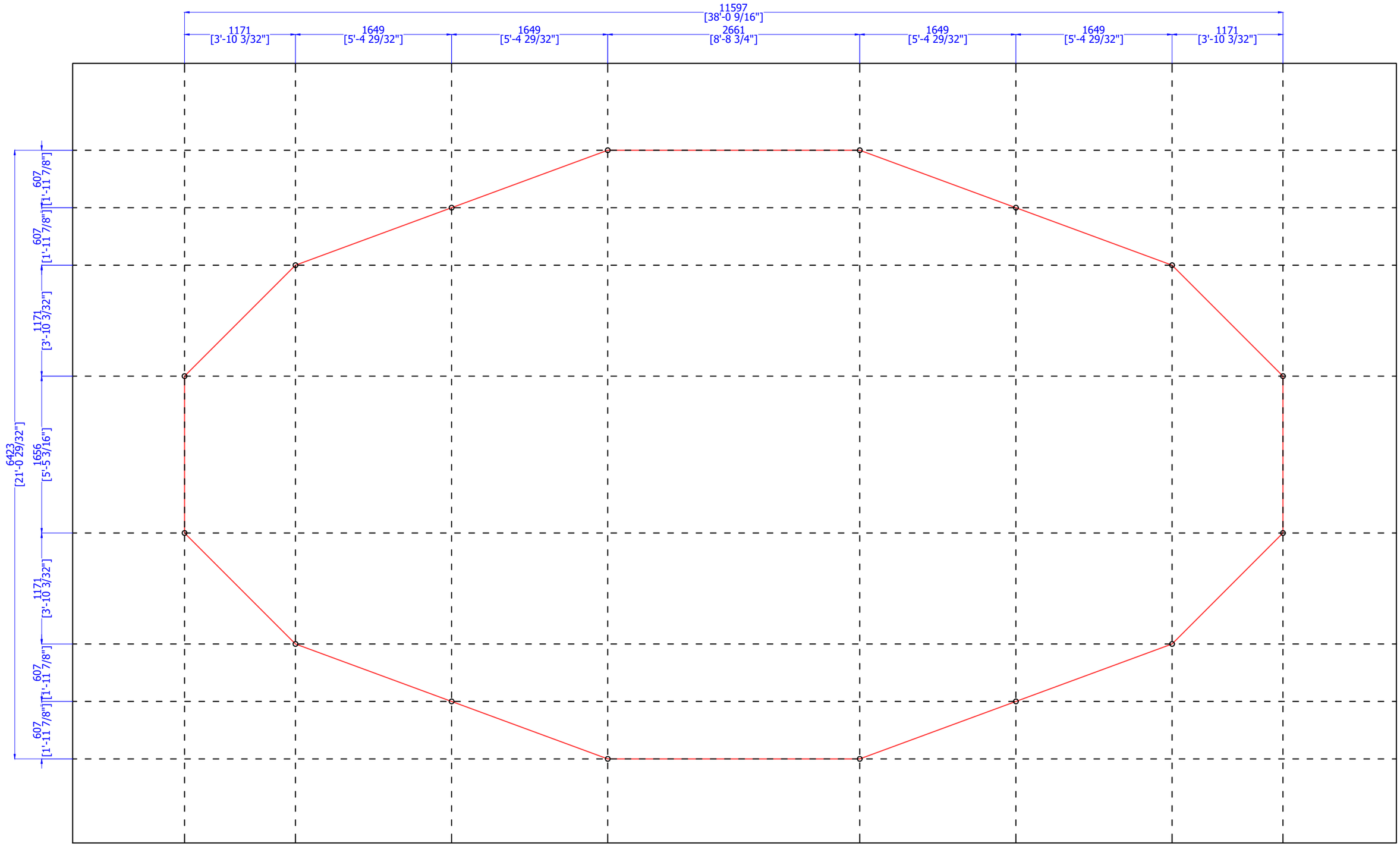
11597
[38'-0 9/16"]
1171
[3'-10 3/32"]
1649
[5'-4 29/32"]
1649
[5'-4 29/32"]
2661
[8'-8 3/4"]
1649
[5'-4 29/32"]
1649
[5'-4 29/32"]
1171
[3'-10 3/32"]
607
[1'-11 7/8"]
607
[1'-11 7/8"]
1171
[3'-10 3/32"]
1656
[5'-5 3/16"]
6423
[21'-0 29/32"]
1171
[3'-10 3/32"]
607
[1'-11 7/8"]
607
[1'-11 7/8"]